22-Dec-25

To

M/s. PURBANI GROUP,
DHAKA,
BANGLADESH.

[Proposal No: 22.Dec.2025/WTT-1021//NP-FP/3.6M/R0/TCP]

Dear Sir,

WTT International Private Limited (WTT) is pleased to provide **M/s. PURBANI GROUP** with the Techno Commercial Proposal for supply of engineering & materials for **ZLD based Filtration Plant of capacity 3600 M^3/Day.** In developing this offer WTT worked with you in an effort to understand your project and business needs. The attached proposal outlines the solutions we feel will best meet these objectives.

We greatly appreciate your consideration of WTT for this project. Our measure of success is how well we deliver solutions that help our client to meet their critical business objectives. We hope to have the opportunity to demonstrate this with your good selves.

Yours Sincerely,

D. Venkatesh
Managing Director

S.NO	DESCRIPTION	PREPARED	APPROVED
1.	Techno Commercial Proposal for – "ZLD based Filtration Plant of capacity 3600 M^3/Day"	MM - GET AR - AGM	DV - MD

CONFIDENTIALITY

All details, specifications, drawings, images, and all other information submitted by us are only intended to the person/organization to which it is addressed and contains proprietary, confidential and or privileged material. Any review, retransmission, dissemination, or other use of, or of taking action in reliance upon this information by person or entities other than the intended recipient is prohibited. All or part information contained in the document is solely intended to the person or entity addresses and sharing this document in part or in whole is prohibited.

WE FEEL DELIGHTED TO PRESENT OUR PATENTED SYSTEMS

CONTENT

1. TECHNICAL AND ENGINEERING DETAILS 5
1.1. INFLUENT FLOW DATA 5
1.2. INFLUENT QUALITY 5
2. DESIGN BASIS 6
2.1. DESIGN SYSTEM CHOSEN 6
2.2. PROCESS COMPATIBILITY 7
2.3. EXPECTED TREATED WATER QUALITY 9
3. EQUIPMENT DETAILS FOR PROPOSED SYSTEMS 10
3.1. SUBMERGED CERAMIC MBR SYSTEM (OPTION – 1) 10
3.2. SUBMERGED HOLLOW FIBRE MBR SYSTEM (OPTION – 2) 11
3.3. DEGASSER TOWER SYSTEM 11
3.4. REVERSE OSMOSIS SYSTEM 12
3.5. HARDNESS & SILICA REMOVAL SYSTEM 13
3.6. TEMPERATURE & ALKALINITY REMOVAL SYSTEM 13
3.7. REJECT REVERSE OSMOSIS SYSTEM 13
4. EQUIPMENT SCOPE OF SUPPLY – BY WTT 14
5. SCOPE OF SUPPLY & INSTALLATION - BY CLIENT 20
6. TYPICAL EQUIPMENT VENDOR LIST 23
7. PRICING DETAIL 25
8. HAPPY CUSTOMERS 27
9. CHANNEL PARTNERS 27
10. PROCESS DESCRIPTION VIDEO 27
11. COMMERCIAL TERMS AND CONDITIONS 28
11.1. TAXES 28
11.2. FREIGHT 28
11.3. INVOICING AND PAYMENT TERMS 28
11.4. EQUIPMENT SHIPMENT 28
11.5. FORCE MAJEURE 29
11.6. PRICING NOTES 29

12. CLIENT SCOPE OF SUPPLY 29
12.1. SAFETY AND ENVIRONMENTAL 29
12.2. JOBSITE AND INSTALLATION REVIEW 30
12.3. START-UP AND COMMISSIONING 31
12.4. FACILITY MANAGEMENT 32
12.5. CONDITIONAL OFFERING 32
13. APPENDIX 33
13.1. APPENDIX A: CLARIFICATIONS 33
13.2. APPENDIX C: WARRANTY 33

1. Technical and Engineering Details

1.1. Influent Flow Data

STREAM	FEED FLOW RATE	UNIT
FILTRATION INLET	3600	M^3/DAY

1.2. Influent Quality

S.NO	PARAMETER	UNIT	FILTRATION INLET
1.	pH	--	7 – 8
2.	BOD	mg/L	30
3.	COD	mg/L	150
4.	TDS	mg/L	2400
5.	TSS	mg/L	50
6.	PVA *	mg/L	NIL
7.	REACTIVE SILICA *	mg/L	10
8.	TKN *	mg/L	NIL
9.	IRON *	mg/L	NIL
10.	SULPHATE *	mg/L	800
11.	CHLORIDE *	mg/L	350
12.	HARDNESS ^	mg/L of $CaCO_3$	120
13.	ALKALINITY *	mg/L of $CaCO_3$	400
14.	TEMPERATURE	°C	30 – 35
15.	OIL & GREASE *	mg/L	NIL
16.	OTHER HEAVY METALS *	mg/L	NIL

*The *Parametrical values have been considered for the purpose of designing the treatment system. Any change in these values will impact design & cost of the Filtration plant.*

*The hardness^ value has been considered as **120 mg/L as $CaCO_3$**, since the reuse of RO permeate water in the process reduces the overall hardness of the effluent.*

The design solution proposed is based on the values as presented in the table above at **FILTRATION Inlet.** All concentrations refer to max concentrations to be used for the system's design. **Any change in the actual inlet parameters will have impact on Process Design, Engineering Design, Cost and Performance.**

2. Design Basis

2.1. Design System Chosen

S.NO	SYSTEM/EQUIPMENT	CAPACITY (M^3/DAY)	PURPOSE OF THE SYSTEM/EQUIPMENT PROPOSED
1.	SUBMERGED CERAMIC MBR SYSTEM **(OPTION–1)**	3600	TO REDUCE FOULING POTENTIAL OF RO FEED WATER
2.	SUBMERGED HOLLOW FIBRE MBR SYSTEM **(OPTION–2)**	3600	TO REDUCE FOULING POTENTIAL OF RO FEED WATER
3.	DEGASSER TOWER	3600	TO REDUCE ALKALINITY/BICARBONATE BY STRIPPING CO_2 FROM EFFLUENT WATER
4.	REVERSE OSMOSIS SYSTEM	3600	TO ACHIEVE RECOVERY OF **95% IN 4 STAGES WITH SINGLE SKID**
HIGH RECOVERY SYSTEM			
5.	HARDNESS & SILICA REMOVAL SYSTEM	198	TO REDUCE HARDNESS & SILICA LEVELS IN RO REJECT WATER TO INCREASE RECOVERY
6.	SUBMERGED CERAMIC MBR SYSTEM	198	TO REDUCE FOULING POTENTIAL OF REJECT RO FEED WATER
7.	TEMPERATURE & ALKALINITY REMOVAL SYSTEM	198	TO REDUCE THE TEMPERATURE & ALKALINITY/BICARBONATE BY STRIPPING CO_2 FROM RO REJECT WATER
8.	REJECT REVERSE OSMOSIS	198	TO ACHIEVE RECOVERY OF **50% - 60% IN 2 STAGES WITH SINGLE SKID** TO INCREASE THE OVERALL RECOVERY AND TO REDUCE EVAPORATOR FEED

NOTE: System capacities mentioned above are based on Filtration Plant influent flow Rate and the Actual capacities may vary.

2.2. PROCESS COMPATIBILITY

1. The incoming raw wastewater shall not contain any substance incompatible with the MOC of the Equipment supplied & inhibitory substances that sufficiently affect the operation of any of the system.

OPTION – 1:

PROPOSED WATER BALANCE

ZLD BASED FILTRATION PLANT FOR 3600 M³/DAY @ 2400 TDS

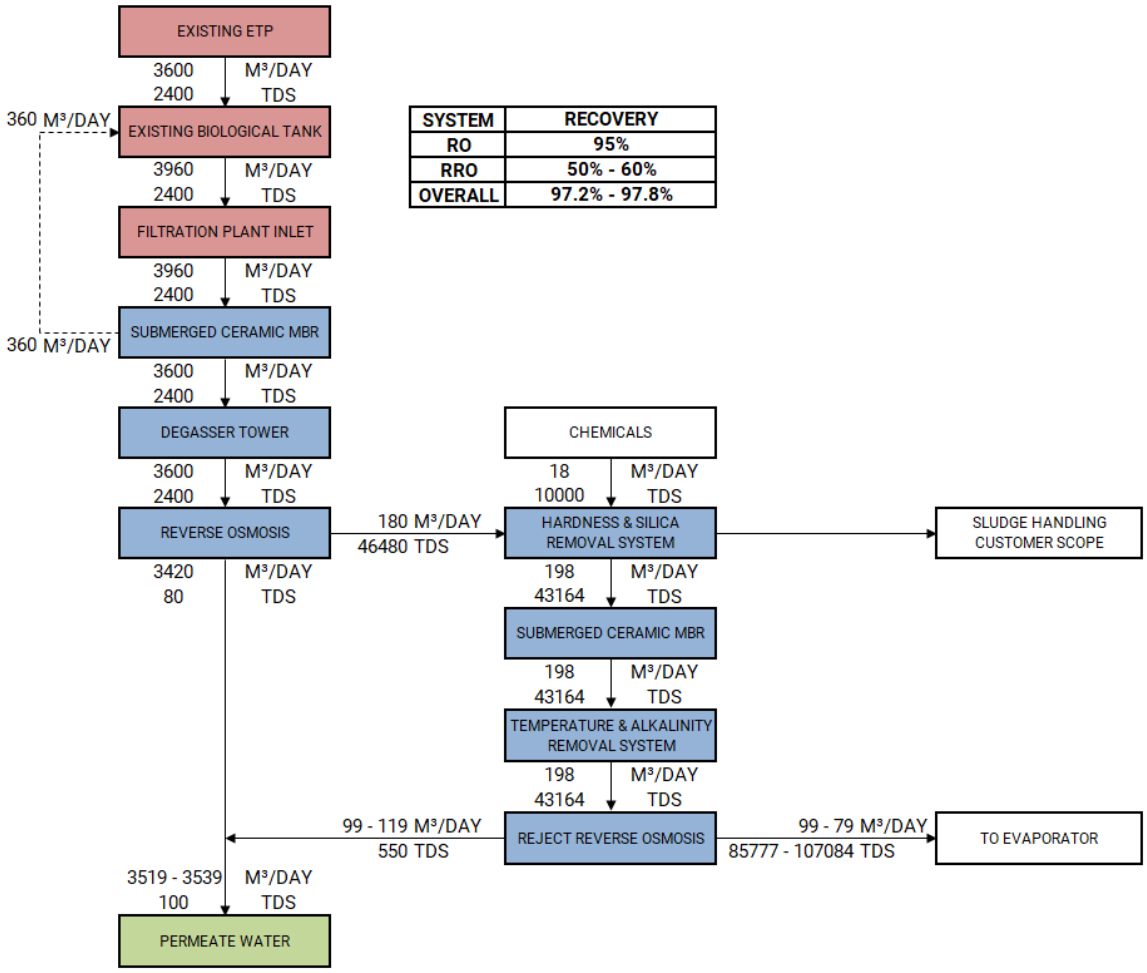

SYSTEM	RECOVERY
RO	95%
RRO	50% - 60%
OVERALL	97.2% - 97.8%

Water Loving Technology

OPTION – 2:

PROPOSED WATER BALANCE

ZLD BASED FILTRATION PLANT FOR 3600 M³/DAY @ 2400 TDS

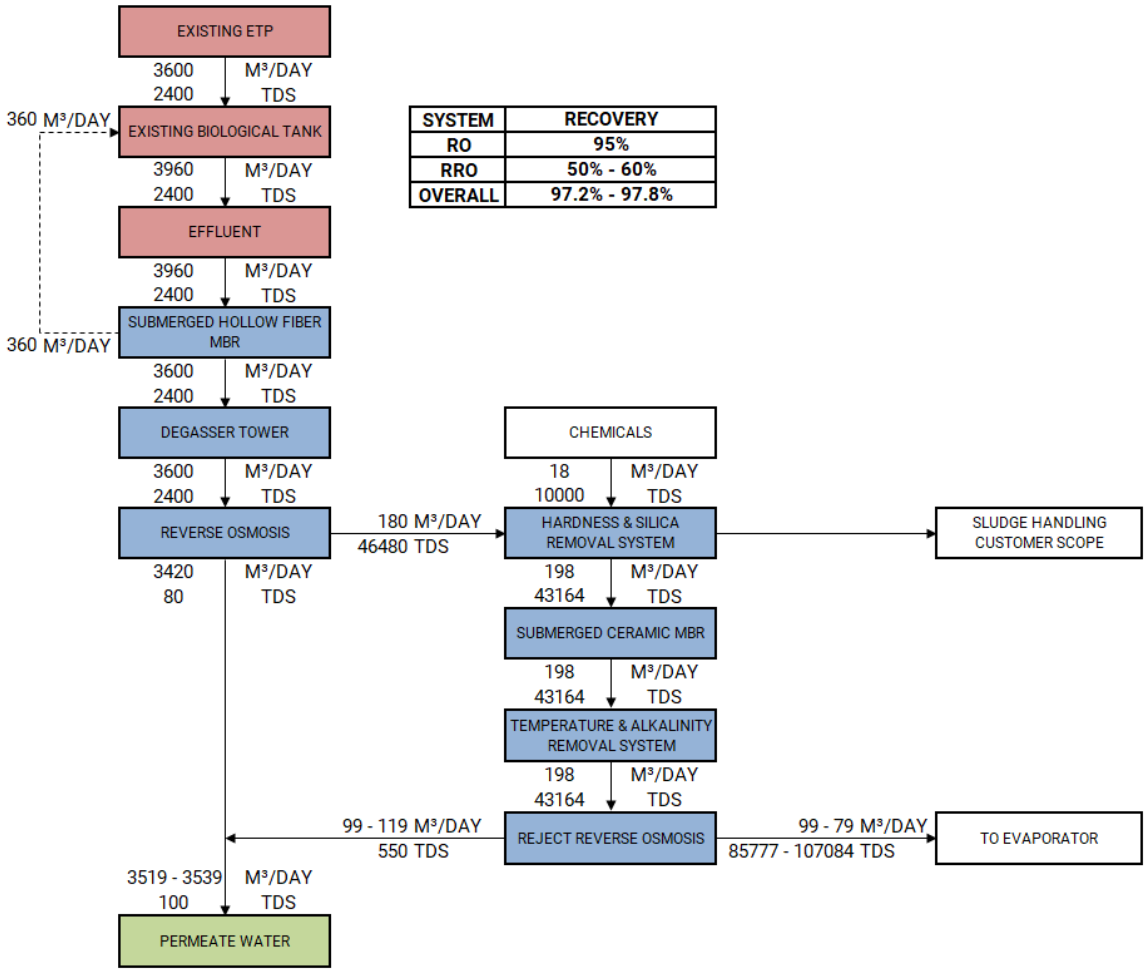

SYSTEM	RECOVERY
RO	95%
RRO	50% - 60%
OVERALL	97.2% - 97.8%

2.3. EXPECTED TREATED WATER QUALITY

The following performance parameters are expected under standard operating conditions after equipment start-up based on the data and assumptions listed above and in Appendix, Warranties. In case of conflicting numbers, the ones listed under Appendix take precedence:

FILTRATION PLANT - STAGEWISE PARAMETERS				
PARAMETER	UNIT	FILTRATION PLANT INLET	REVERSE OSMOSIS @ 97.2% - 97.8% OVERALL RECOVERY	
			OVERALL PERMEATE	REJECT
pH	--	7 – 8	5 – 5.5	7 – 7.5
BOD	mg/L	30	BDL *	< 1400 *
COD	mg/L	150	BDL *	< 6850 *
TDS	mg/L	2400	< 100	85000 – 108000
TSS	mg/L	50	BDL*	NA*
PVA	mg/L	NIL	NIL	NIL
REACTIVE SILICA	mg/L	10	< 1	< 260
TKN	mg/L	NIL	NIL	NIL
IRON	mg/L	NIL	NIL	NIL
SULPHATE	mg/L	800	< 25	63500 – 64500
CHLORIDE	mg/L	350	< 30	17000 – 18000
HARDNESS	mg/L of $CaCO_3$	120	< 1	1400 – 1800
ALKALINITY	mg/L of $CaCO_3$	400	< 20	700 – 1000
TEMPERATURE	°C	30 – 35	30 – 35	30 – 35
OIL & GREASE	mg/L	NIL	NIL	NIL
OTHER HEAVY METALS	mg/L	NIL	NIL	NIL

BDL – below detectable limit, NA – not applicable; Values are system generated which may vary with variation in inlet & on operational basis

* Depends on the **available form of solubility.**

Notes:

- All influent quality parameters are based on daily average values of a minimum of four (4) Nos. of hourly composite samples collected at regular intervals over a day, with testing performed to applicable industry-approved standards.
- The treated water parameters could take 2 months for attaining specified values as per above table after successful commissioning.
- The above recovery water quality expectation is based on WTT supplying the system and scope Equipment as per the scope of supply table described in section 4 below.

3. Equipment Details for Proposed Systems

3.1. Submerged Ceramic MBR System (Option – 1)

This system comprises of Eco-friendly & long-lasting Ceramic Membranes. Ceramic MBR system operates at low operational flux and easy to clean as the membrane is rigid and do not lose its form over a period of time. The system can be cleaned with Permeate & Chemically Enhanced Backwash technology and Air scouring to avoid sludge deposition. The sprinkler pumps ensure that there is no clogging over the membrane surface.

3.2. SUBMERGED HOLLOW FIBRE MBR SYSTEM (OPTION – 2)

This system combines conventional biological treatment processes with membrane filtration to provide an advanced level of organic and suspended solids removal in reduced foot print. Both clarification and filtration provide polished influent for RO system.

3.3. DEGASSER TOWER SYSTEM

Degasser tower eliminates the carbonaceous gases from the effluent water by means of a packed decarbonizing tower. The air blown from the bottom of the tower carries away CO_2 from wastewater to the top of the tower to reduce the dissolved gases and there by protect the RO membranes from scaling.

Water Loving Technology

3.4. REVERSE OSMOSIS SYSTEM

Reverse Osmosis Process is the forced passage of water through a membrane against the natural osmotic pressure to accomplish separation of ions and water. It separates the dissolved salts from the feed water and reduces the TDS level, and this can be reused for industrial process. We can achieve lowest CAPEX and OPEX.

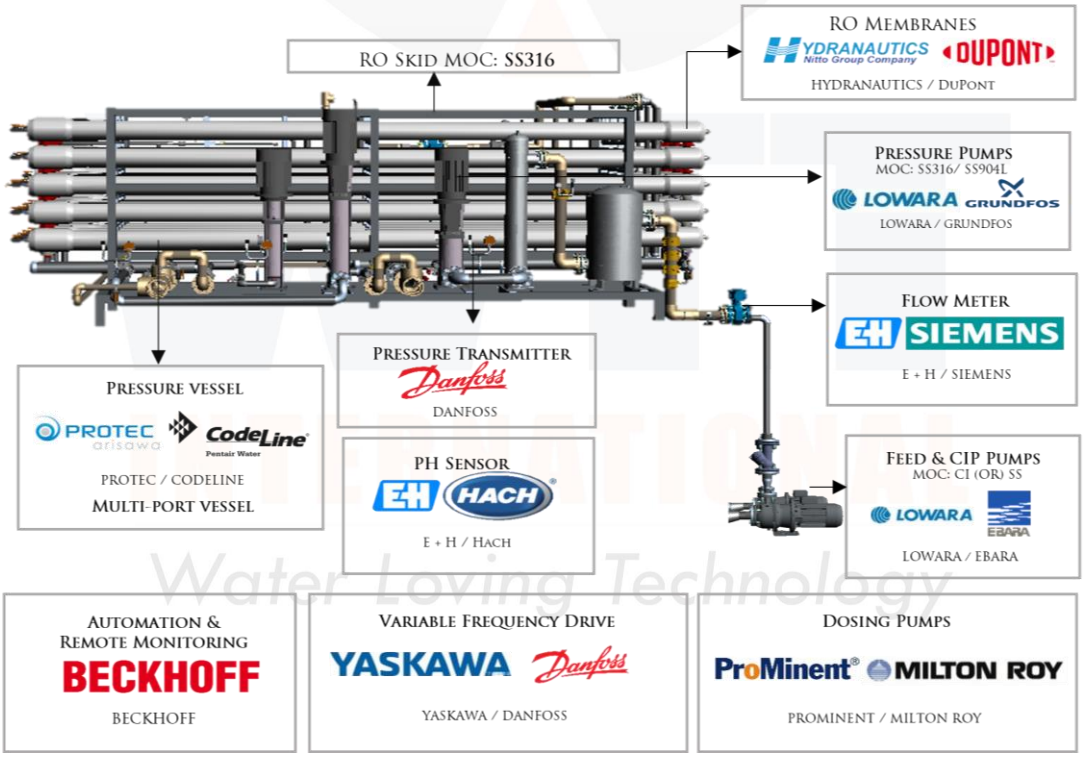

3.5. HARDNESS & SILICA REMOVAL SYSTEM

Hardness & Silica removal system is proposed where the reject water from the RO systems is raised to high pH, by addition of alkali for the conversion of Bicarbonates into Carbonates and reduction of Hardness causing magnesium, calcium ions into its hydroxide forms. This again treated with flocculants & coagulants for the precipitation of Hardness producing salts and silica removal. The effluent further Neutralized by the addition of acids. Hence, the effluent will have lesser amounts of Fouling and Scaling compounds.

3.6. TEMPERATURE & ALKALINITY REMOVAL SYSTEM

Temperature & Alkalinity removal system designed where air and water brought into direct contact with each other in cross flow to reduce the inlet water temperature and carries away CO2, dissolved gases from the effluent water for better performance in RO. This system proposed to protect the RO membranes from scaling and to increase the membrane life.

3.7. REJECT REVERSE OSMOSIS SYSTEM

The Reject RO increases the water recovery and the Reject stream from the Reject RO will have high TDS which will reduce the evaporator's load enabling lesser utility consumption. This increased water recovery reduces the feed to the evaporator. The High TDS solution can be reused as Brine solution in process plant.

4. Equipment Scope of Supply – BY WTT

PLANT EQUIPMENT LIST			
A	**SUBMERGED CERAMIC MBR SYSTEM** (OPTION – 1)		**3600 M^3/DAY**
S.NO	**DESCRIPTION**	**SPECIFICATION**	**QUANTITY**
1.	SUBMERGED CERAMIC MBR SYSTEM	NO. OF MODULES	2 LOT
		NO. OF TRAINS	2
		MOC OF MODULE	CERAMIC
		PERMEATE PUMP	2W + 1SS
		PUMP MOC (CASING/IMPELLER)	CI / CI
		TYPE OF PUMP	SURFACE MOUNTED
		BACKWASH PUMP	2W + 1S
		PUMP MOC (CASING/IMPELLER)	CI / CI
		TYPE OF PUMP	SURFACE MOUNTED
		SLUDGE TRANSFER PUMP	1W + 1S
		PUMP MOC (CASING/IMPELLER)	CI / CI
		PUMP TYPE	SURFACE MOUNTED
		BLOWER	1W + 1S
		BLOWER TYPE	LOBE
		DOSING PUMP	2W
		DOSING PUMP MOC	PP
		TURBIDITY SENSOR	PERMEATE
		ELECTROMAGNETIC FLOW METER	PERMEATE

B	SUBMERGED HOLLOW FIBRE MBR SYSTEM (OPTION – 2)		3600 M^3/DAY
S.NO	DESCRIPTION	SPECIFICATION	QUANTITY
2.	SUBMERGED HOLLOW FIBER MBR SYSTEM	MBR MODULE	2 LOT
		MOC OF MODULE	PVDF, Braided hollow Fiber
		MOC OF RACK	SS316
		PERMEATE PUMP	2W + 1SS
		PUMP MOC	CI / CI
		TYPE OF PUMP	SURFACE MOUNTED
		BACKWASH PUMP	2W + 1S
		PUMP MOC	CI / CI
		TYPE OF PUMP	SURFACE MOUNTED
		BLOWER	1W + 1S
		BLOWER TYPE	LOBE
		SLUDGE TRANSFER PUMP	1W + 1S
		PUMP MOC	CI / CI
		PUMP TYPE	SURFACE MOUNTED
		DOSING PUMP	2W
		PUMP MOC	PP
		ELECTROMAGNETIC FLOW METER	PERMEATE

C	DEGASSER TOWER		3600 M^3/DAY
S.NO	DESCRIPTION	SPECIFICATION	QUANTITY
3.	DEGASSER TOWER	DEGASSER TOWER VESSEL	2
		TOWER MOC	FRP
		pH SENSOR	2

		DEGASSER TOWER MEDIA	2 LOT
		MEDIA MOC	PP
		DEGASSER TOWER BLOWER FAN	2
		DOSING PUMP	2W + 1SS
		PUMPS MOC	PP / TEFLON

D	REVERSE OSMOSIS SYSTEM		3600 M^3/DAY
S.NO	**DESCRIPTION**	**SPECIFICATION**	**QUANTITY**
4.	REVERSE OSMOSIS SKID	**TOTAL NUMBER OF SKIDS**	**1**
		SKID MOC	SS316
		NUMBER OF STAGES	4
		RO FEED PUMP	2W + 1S
		PUMP MOC (CASING/IMPELLER)	CI / CI
		PUMP TYPE	SURFACE MOUNTED
		PRE-FILTER	1 LOT
		PRE-FILTER HOUSING MOC	SS316
		DOSING PUMPS	3W + 1SS
		DOSING PUMPS MOC	PP
		DOSING TANKS	2
		DOSING TANK MOC	LDPE
		HIGH PRESSURE PUMP WITH INVERTER	2W
		HIGH PRESSURE PUMP MOC	SS316
		HIGH PRESSURE PUMP TYPE	VERTICAL-MULTI STAGE
		BOOSTER PUMPS WITH INVERTER	3W
		BOOSTER PUMPS MOC	SS316

		BOOSTER PUMP TYPE	VERTICAL-MULTI STAGE
		PRESSURE VESSELS	46 No's
		PRESSURE VESSELS MOC	FRP
		RO MEMBRANES	276 No's
		RO MEMBRANES MOC	COMPOSITE POLYAMIDE
		pH SENSOR	1
		PRESSURE INDICATOR	10
		PRESSURE TRANSMITTER	10
		ELECTROMAGNETIC FLOWMETER	5 No's (RO FEED, EACH STAGE PERMEATE LINE)
		CIP DOUBLE SKID WITH AUTOMATION (INCLUSIVE OF PUMPS WITH ITS FILTER, FLOWMETER, PRESSURE TRANSMITTER, AUTO VALVES & DOSING PUMPS)	1 SET

HIGH RECOVERY SYSTYEM			
E	**HARDNESS & SILICA REMOVAL SYSTEM**		**198 M^3/DAY**
S.NO	**DESCRIPTION**	**SPECIFICATION**	**QUANTITY**
5.	HARDNESS & SILICA REMOVAL SYSTEM	AGITATORS FOR REACTION TANKS	3 NOS.
		AGITATORS FOR CHEMICAL TANKS	3 NOS.
		LAMELLA SETTLER	1 LOT
		LAMELLA PACKS MOC	PVC
		ANGLE OF INCLINATION FOR PACKS	55° – 60°
		LAMELLA SETTLER FRAME MOC	SS316
		DOSING PUMP	4W + 1SS
		DOSING PUMP MOC	PP

		POLY PREPARATION UNIT	1
		SLUDGE TRANSFER PUMP	1W + 1S
		PUMP MOC (CASING/IMPELLER)	CI / CI
		PUMP TYPE	SURFACE MOUNTED
		pH SENSOR	1
		PIPING FOR SLUDGE THICKENER	1
		PIPING MOC	SS316L

F	SUBMERGED CERAMIC MBR SYSTEM		198 M^3/DAY
S.NO	**DESCRIPTION**	**SPECIFICATION**	**QUANTITY**
6.	SUBMERGED CERAMIC MBR SYSTEM	NO. OF MODULES	1 LOT
		NO. OF TRAINS	1
		MOC OF MODULE	CERAMIC
		PERMEATE / BACKWASH PUMP	1W + 1S
		PUMP MOC (CASING/IMPELLER)	CI / CI
		TYPE OF PUMP	SURFACE MOUNTED
		DOSING PUMP	2W
		DOSING PUMP MOC	PP
		ELECTROMAGNETIC FLOW METER	PERMEATE
		TEMPERATURE AND ALKALINITY REMOVAL SYSTEM	1 NO.

G	REJECT REVERSE OSMOSIS SYSTEM		198 M^3/DAY
S.NO	**DESCRIPTION**	**SPECIFICATION**	**QUANTITY**
7.	REJECT REVERSE OSMOSIS SKID	**TOTAL NUMBER OF SKIDS**	**1**
		SKID MOC	SS316

		NUMBER OF STAGES	2
		RO FEED PUMP	1W + 1S
		PUMP MOC (CASING/IMPELLER)	SS316
		PUMP TYPE	SURFACE MOUNTED
		PRE-FILTER	1 LOT
		PRE-FILTER HOUSING MOC	SS316
		DOSING PUMPS	2W + 1SS
		DOSING PUMPS MOC	PP
		DOSING TANKS	2
		DOSING TANK MOC	LDPE
		HIGH PRESSURE PUMP WITH INVERTER	3W
		HIGH PRESSURE PUMP MOC	SS316
		HIGH PRESSURE PUMP TYPE	VERTICAL/ HORIZONTAL-MULTI STAGE
		BOOSTER PUMP WITH INVERTER	2W
		BOOSTER PUMP MOC	SS316/SS904L
		BOOSTER PUMP TYPE	HORIZONTAL-MULTI STAGE
		PRESSURE VESSELS	3 No's
		PRESSURE VESSELS MOC	FRP
		RO MEMBRANES	18 No's
		RO MEMBRANES MOC	COMPOSITE POLYAMIDE
		pH SENSOR	1
		PRESSURE INDICATOR	6
		PRESSURE TRANSMITTER	6
		ELECTROMAGNETIC FLOWMETER	3 No's (RO FEED, EACH STAGE PERMEATE LINE)

		CIP SINGLE SKID WITH AUTOMATION (INCLUSIVE OF PUMPS WITH ITS FILTER, FLOWMETER, PRESSURE TRANSMITTER, AUTO VALVES & DOSING PUMPS)	1 SET

W – Working; S – Standby; SS – Store Standby

Specification and quantity details mentioned above are preliminary and may be revised to optimize the performance of the system.

OTHER GENERAL ITEMS IN WTT's SCOPE:

- *Piping in SS, UPVC and its associated items*
- *All other related valves and puddle flanges required*
- *Electrical control panel for proposed system with standard automation*
- *Power cable and control cable within the electrical panel*
- *Power cable and control cable from electrical panel to proposed equipment*
- *General layout & civil detailed drawing for proposed systems*

5. Scope of Supply & Installation - BY CLIENT

- Installation of supplied Equipment.
- Transfer of Influent up to proposed MBR system.
- All civil related and excavation works, civil structural drawings, underground piping & piping for electrical cabling during civil works.
- Chemical supply and Bulk chemical storage tanks (with fume absorber for acid tanks) for proposed systems based on the available optimum level of chemical procurement
- Raw / Permeate water transfer for cleaning of Proposed Filtration system
- Raw water supply for whole plant and treated water transfer (Both Permeate & Reject water)
- Air conditioning Systems for Panel room & Personal Computers
- Compressed air for pneumatic panel for proposed systems
- RO Permeate Water Transfer and handling
- All loading & unloading @ site
- Sludge handling and disposal during plant commissioning and operation
- Utilities like Power, Steam, Welding gas, Hot water etc., if Required

- Separate panel, wiring with fans & lights for whole plant & its power supply
- Incomer cable and its connections with WTT supplied electrical panel and stabilized power supply
- All Necessary Earthing & Safety/Protective Earthing shall be provided for individual Instruments, Motor/Pump, Other Electrical Equipment & Panel as per requirement Input power to individual WTT supplied electrical panel
- Pre-Shipment Inspection requested by the local authorities.
- All license fees and / or custom duties.
- Provide Food (3 meals a day), Accommodation with attached sanitary facility (Hotel/Guest House) and Local transport to the team of WTT during all kinds of deputations.
- Installation consumables (such as welding electrodes, cutting disk and others).
- Supply and assembly of all drainage lines for rain water, sewers, etc.
- Any construction approval from local Authorities.
- Supply of any hoisting and/or laying equipment (cranes forklift, etc.) both truck mounted or not.
- Local Transport, Food & Accommodation of WTT's Civil Engineer for inspection after completion of civil works at site.
- Construction of site fencing/railing.
- Protection for all field instruments, local switches, motors, etc.,
- Safety handrails for all tanks, safety items like life buoy rings, eye washer, life-jackets, etc.
- Removal of all residual debris after construction and thorough cleaning of all tanks before plant start-up.
- Any further item not described in our offer.

HIGHLIGHTS

- *Our scope of supplies is of **SS316L pipes for Air line, MBR & RO pipe line**, materials like UPVC are used only in areas where SS316L is not compatible.*
- *Submerged CERAMIC MBR system with a **higher membrane life** and auto cleaning capabilities*
- ***Rapid Filtration & Backwash Sequence** with automatic valves for pre-filtration.*
- *Specialized Degasser Tower proposed to **reduce the scaling of RO membranes** and in-turn achieves lesser number of cleaning cycles.*

- *This Degasser tower system enables to **increase the life of RO membranes.***
- *All part of the plant has **Level sensors and floats** to have complete data on volume of water in each tank.*
- ***Individual pressure transmitters for Inlet & Outlet** of each stage in RO to know exactly where the fouling has occurred and to initiate cleaning for that specific stage.*
- *Each stage of **RO permeate has individual EMFM** for better control and better automation to keep efficiency and life of RO.*
- ***STATE OF ART 2 SKIDS of CIP system** for RO and **STATE OF ART SINGLE SKID of CIP system** for Reject RO with full automation including dosing of chemicals with pH automation and flow with pressure control.*
- *Electrical panel supplied by WTT with necessary cooling technologies and easy operative switch for Automatic & Manual operations.*
- ***PC controlled HMI panel** provided with complete automation and acknowledgement & warnings for cleaning necessities based on the operating conditions.*

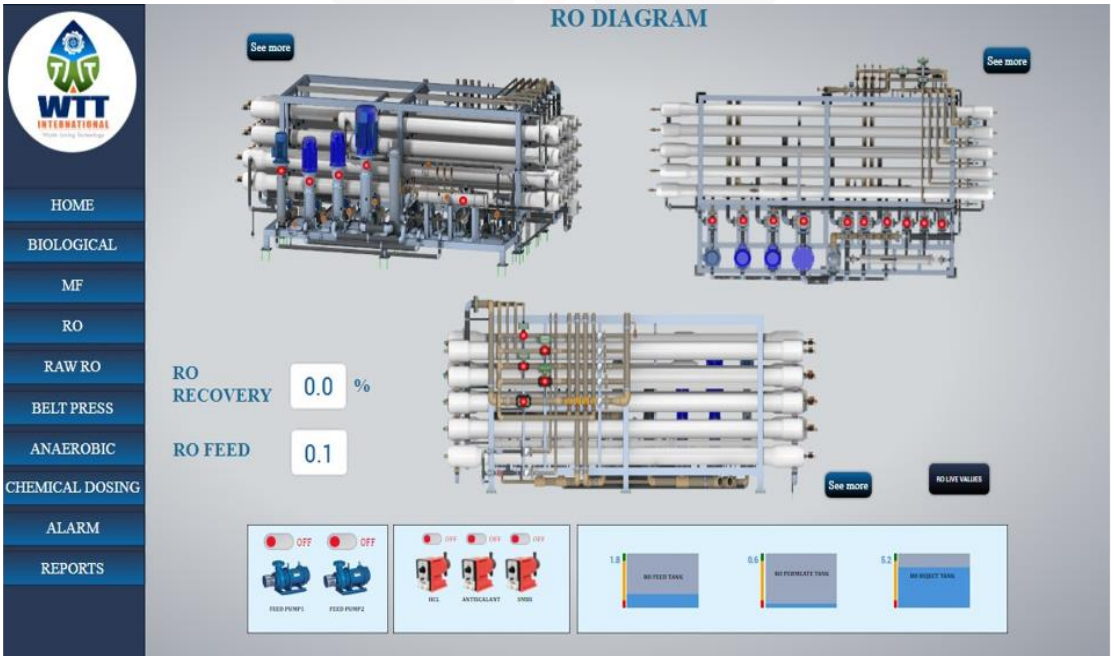

Sample of our HMI screens and is a tentative reference

*Making the plant In-hand through **SCADA** for Live Data monitoring using a smartphone (or) PC.*

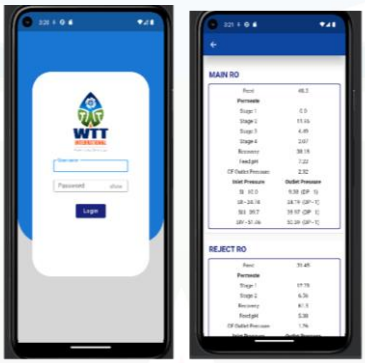

REMOTE DATA MONITORING

6. Typical Equipment Vendor List

S.NO	EQUIPMENT	VENDORS
1.	BLOWER	ROBUSCHI
2.	PRESSURE PUMP	GRUNDFOS / LOWARA
3.	SURFACE MOUNTED PUMP	EBARA / LOWARA
4.	DOSING PUMP	PROMINENT / MILTON ROY
5.	RO MEMBRANES	HYDRANAUTICS / DUPONT
6.	PRESSURE VESSELS	PROTEC / CODELINE / ROPV / DAX / XLINE
7.	VARIABLE FREQUENCY DRIVE	YASKAWA / DANFOSS

8.	ELECTROMAGNETIC FLOWMETER	E+H / SIEMENS
9.	INLINE ANALYZERS	E+H / HACH / PROMINENT
10.	LEVEL TRANSMITTER	E+H / PUNE TECTROL
11.	LEVEL FLOAT	FAES
12.	PRESSURE TRANSMITTER	DANFOSS
13.	PRESSURE GAUGE	FORBES MARSHALL
14.	AUTOMATION	BECKHOFF / SIEMENS
15.	ELECTRICAL PANEL	RITTAL / HOFFMAN
16.	ELECTRICAL CABLE	LAPP
17.	RO & RRO SKIDS	**WTT INTERNATIONAL**
18.	DEGASSER TOWER	
19.	HIGH RECOVERY SYSTEM	

The above-mentioned vendors are subjected to change based on the delivery terms for an equivalent vendor without compromising the quality and WTT reserves the right to change the vendor without any prior intimation.

7. Pricing Detail

PRICE FOR PROPOSED SYSTEMS – 3600 M^3/DAY		
S.NO	**SYSTEM/EQUIPMENT – (OPTION-1)**	**PRICE IN USD**
1.	**SUBMERGED CERAMIC MBR SYSTEM**	**$ 1,635,198**
2.	**DEGASSER TOWER SYSTEM**	**$ 85,217**
3.	**REVERSE OSMOSIS SYSTEM** (**95% RECOVERY** IN 4 STAGES WITH **SINGLE SKID**)	**$ 1,051,319**
4.	**HIGH RECOVERY SYSTEM** (WHICH INCLUDES HARDNESS & SILICA REMOVAL SYSTEM, SUBMERGED CERAMIC MBR, TEMPERATURE & ALKALINITY REMOVAL SYSTEM, **REJECT RO SYSTEM (50% - 60% RECOVERY** IN 2 STAGES))	**$ 529,437**
TOTAL PRICE FOR PROPOSED SYSTEMS		**$ 3,301,171**

PRICE FOR PROPOSED SYSTEMS – 3600 M^3/DAY		
S.NO	**SYSTEM/EQUIPMENT – (OPTION-2)**	**PRICE IN USD**
1.	**SUBMERGED HOLLOW FIBER MBR SYSTEM**	**$ 1,576,112**
2.	**DEGASSER TOWER SYSTEM**	**$ 85,217**
3.	**REVERSE OSMOSIS SYSTEM** (**95% RECOVERY** IN 4 STAGES WITH **SINGLE SKID**)	**$ 1,051,319**
4.	**HIGH RECOVERY SYSTEM** (WHICH INCLUDES HARDNESS & SILICA REMOVAL SYSTEM, SUBMERGED CERAMIC MBR, TEMPERATURE & ALKALINITY REMOVAL SYSTEM, **REJECT RO SYSTEM (50% - 60% RECOVERY** IN 2 STAGES))	**$ 529,437**
TOTAL PRICE FOR PROPOSED SYSTEMS		**$ 3,242,085**

All above mentioned prices given for the proposed systems with complete automation

- Pricing provided herein does not include any duties and taxes
- Pricing provided herein is on **Ex-Works** basis & does not include the insurance charges
- Supervision of erection and commissioning of WTT supplied system shall be extra
- Payment/commercial terms & conditions as per WTT's General Terms & Conditions of sale
- Price valid for 15 days from the date of proposal due to market volatility

8. Happy Customers

WELSPUN
JCT LIMITED
SIDDHI Group
NSL TEXTILES
Sharadha TERRY PRODUCTS LTD
BHILWARA LNJ GROUP
KPR MILL LIMITED
Kanchan
TRIDENTGROUP
Vardhmän
BEST
KITEX
Sona
SKT
BIRLA CENTURY
Himatsingka
premier
GANGA Acrowools
NAHAR INDUSTRIAL ENTERPRISES LIMITED
rdl RSL Dyecot Private Lmited
NUMALIGARH REFINERY LIMITED
NRL
silk park kanchipuram
Ministry of Textile
Government of India & Government of Tamilnadu

AND 12 CETPs ACROSS THE COUNTRY

9. Channel Partners

HYDRANAUTICS Nitto Group Company
DUPONT
AsahiKASEI
KOCH MEMBRANE SYSTEMS
xylem Let's Solve Water
GRUNDFOS
ROBUSCHI
Atlas Copco
KAESER COMPRESSORS
Endress+Hauser People for Process Automation
HACH
ABB
SIEMENS
BECKHOFF
RITTAL
OTT GROUP

10. Process Description Video

11. Commercial Terms and Conditions

11.1. TAXES

Taxes and Duties shall be extra as applicable. Pricing provided herein does not include any taxes of destination country.

If Tax Exemption is applicable, customer has to provide a copy to WTT of any applicable tax exemption certificates as issued by an approved taxation authority for the specific project location. Without an approved tax exemption certificate received by WTT all submitted invoices will include applicable tax. However, we reserve the right to revise our price in case of tax exemption.

11.2. FREIGHT

All the Equipment and components foresee **Ex-works** delivery as per I.C.C. Incoterms-2010.

11.3. INVOICING AND PAYMENT TERMS

The pricing quoted in this proposal is based on the following payment terms, in principally agreed.

(1) 30% Advance Payment along with PI.

(2) 70% by irrevocable Letter of Credit payable at sight against Shipment documents.

Equipment shipment is contingent on receipt of earlier milestone payments.

11.4. EQUIPMENT SHIPMENT

Client and WTT will arrange a kick off meeting after contract acceptance to develop firm shipment schedule. This estimated delivery schedule assumes no more than 1 week for Client review of submittal drawings. Any delays in Client approvals or requested changes may result in additional charges and/or a delay to the schedule.

Material supply for the proposed plant in 6 - 7 months is expected. The delivery schedule excludes the months of August & December, the delivery schedule is subject to review and adjustment. Partial shipments are allowed. In case of modifications to the volume of the supply after the emission of the order confirmation, WTT reserves the right to modify the delivery time and the agreed price.

11.5. FORCE MAJEURE

Please be advised that force majeure is applicable to the quotation provided. The unforeseen and uncontrollable events as defined in our terms and conditions, such as natural disasters, wars or pandemics & other events that prevent the parties from fulfilling their contractual commitments have occurred, impacting our ability to honor the terms outlined in this quotation. We will diligently review the situation and promptly communicate any necessary adjustments or potential delays in fulfilling the quoted services or products in compliance with the force majeure provisions outlined in our agreement.

11.6. PRICING NOTES

All prices quoted are in **USD**. Any applicable tax of destination country is not included. Client will pay all applicable Local, State / Provincial, or Federal taxes & Duties. WTT may manufacture and source the Equipment and any part thereof globally in the country or countries of its choosing, provided that the Equipment complies with all of the requirements specified in this Agreement.

The Equipment delivery date, start date, and date of commencement of operations are to be negotiated. Title and risk of loss will transfer upon delivery in accordance with the INCOTERMS 2010. Commercial Terms and Conditions shall be in accordance with WTT's General Terms and Conditions of Sale as included in Appendix.

12. CLIENT SCOPE OF SUPPLY

12.1. SAFETY AND ENVIRONMENTAL

First aid, emergency medical response, eyewash & safety showers in the water treatment area. Chemical spill response, security & fire protection systems as per local codes. Environmental use and discharge permits for all chemicals at Client facility either listed in this document or proposed for use at a later date. Any special permits required for WTT's or Client employees to perform work related to the water treatment system at the facility. All site testing, including soil, ground and surface water, and air emissions, etc. Disposal of all solid & liquid waste from WTT's system including waste materials generated during construction, startup and operation.

Provide appropriate protection of the environment & local community, the health and safety of all workers and visitors at the site and the security of the facility. Provide safety

related equipment & services such as site security, fire systems, lifting equipment and its operation, fall protection, adequate floor grating, ventilation, and safe access to equipment & electrical systems areas.

Equipment and trained support personnel for any confined space entry required during equipment installation/startup/commissioning/servicing. For permit-required confined space entry, a qualified rescue team on stand-by and available to respond within 4 minutes of an emergency.

Client will identify and inform WTT's personnel of any hazards present in the work place that could impact the delivery of WTT's scope of supply and agrees to work with WTT to remove, monitor, and control the hazards to a practical level. Client will provide training to WTT's personnel on all relevant & standard company operating procedures and practices for performing work on site.

12.2. JOBSITE AND INSTALLATION REVIEW

Review of WTT's supplied equipment drawings and specifications. All easements, licenses and permits required by governmental or regulatory authorities in Connection with the supply, erection and operation of the system.

Overall plant design, detail drawings of all termination points where WTT's equipment or Materials tie into equipment or materials supplied by others Stamping, signing or Sealing General drawings as per State, or local regulations or codes. All applicable civil design and works, including any building, site preparation, grading, excavations, foundations and trenches and accessories.

All electrical Labor and supplies leading up to jobsite including fittings, conduit, supports, cable trays, wire and hardware, air-conditioning of panels required to appropriately ground / earth the equipment as required for installation and ongoing operations.

All mechanical Labor and supplies leading up to jobsite including interconnecting piping, heat tracing (if required), fittings, conduit, pipe supports, and hardware as required for installation and ongoing operations. All instrumentation and automatic pneumatic valves including but not limited to; air/sample line tubing, fittings, conduit, supports, isolating valves as required for installation and ongoing operations. Loading, unloading and transportation of

equipment, materials required for WTT to perform duties outlined in WTT's Scope of Supply to the jobsite and/or warehouse.

Client will provide all access structures (scaffolding), mechanical lifting equipment (cranes, forklifts, scissor lifts, etc.), suitable site/shelter for placement of the proposed equipment, either inside appropriate housing, or outdoors.

Precaution: electrical equipment including the PLC may require air-conditioned rooms to prevent overheating of sensitive electronic equipment depending on climatic conditions. Bulk chemical storage and tanks, including secondary containment in accordance with local codes. Client will receive, off-load, log, and store all chemical and materials in accordance with Manufacturer's recommendation that are shipped. Compressed instrument air for pneumatic valves instruments and ejector system Equipment anchor bolts, Laboratory services, operating and maintenance personnel during equipment checkout, start-up and operation. Any on-site painting or touch-up painting of equipment supplied. Disposal of any Preservative.

For erection, WTT will ship the accessories such as pipes, bolts, nuts, screws, cables, valves any other equipment or devices in excess quantities than required. This is in order to avoid shortages during the assembly due to damage or any other cause as it is difficult to procure the accessories locally. It is notified that all the shipped accessories during assembly and the excess accessories after commissioning are always remain the properties of WTT. WTT has the authority to retake the same at any period of time, even before and after commissioning. It is client's responsibility to preserve the above-mentioned items till WTT takes back the same.

12.3. START-UP AND COMMISSIONING

Installation & removal of temporary screens on all process lines Flushing and disinfection of all piping and tanks (including process equipment tanks) and verification of removal of all residual debris from construction. Alignments & required materials for rotating equipment MEG testing of all field motor power wiring (as required). Continuity checks for all electrical field wiring as per Installation Checklist, Hydro-testing of all field installed piping. Supply raw materials, oil/lubricants chemicals and utilities during start-up and operation.

Electrical & Mechanical support labor for commissioning activities, loading of membranes, stacks, modules, etc.

12.4. FACILITY MANAGEMENT

Client will provide such warehouse storage space and facilities, as are available at the site, and are reasonably appropriate to store parts, consumables, tools, etc. in accordance with manufacturer's recommendations. Such warehouse storage space will be a segregated area, secured and protected from adverse climate as may reasonably be required. The storage area shall be facilitated with 24 hours lock & key with security and Client will be responsible for risk of loss of WTT's parts while in storage at the site. Client will maintain WTT's parts stored at the site free & clear of any and all liens of Client and lenders, bondholders, contractors & other creditors of any nature.

Client will afford WTT's personnel free access and egress of the facility for all authorized work. Provide workshop facilities/area with roof and stabilized power supply, as is reasonably appropriate to carry out machining/fabrication works.

Provide adequate illumination and emergency lighting for all areas in which the WTT will be executing the scope of supply. Identify a Client project contact person to be available to WTT's personnel to address any issues related to WTT's execution of WTT's scope of work. Responsible for the equipment for movement of chemical drums, totes, and resins, as is reasonable. Provide all site utilities such as raw water, instrument quality air, potable water and power required for operation of the proposed equipment included in this scope of supply.

12.5. CONDITIONAL OFFERING

Client understands that this order confirmation has been issued based upon the information provided by Client and currently available to, WTT at the time of proposal issuance. Any changes or discrepancies in site conditions (including but not limited to system influent characteristics, changes in Environmental Health and Safety ("EH&S") conditions, and/or newly discovered EH&S concerns), Client financial standing, Client requirements, or any other relevant change, or discrepancy in, the factual basis upon which this proposal was created, may lead to changes in the offering, including but not limited to

changes in pricing, warranties, quoted specifications, or terms and conditions. WTT's offering in this proposal is conditioned upon a full WTT EH&S.

13. APPENDIX

13.1. APPENDIX A: CLARIFICATIONS

- Pump MOC has been considered as per WTT standard practice.
- The Equipment in WTT scope will be procured as per WTT Standard Vendor List.
- WTT has not envisaged third party equipment inspection before dispatch.
- The payments received once could not be processed again for refund.
- WTT has considered instruments as per WTT standard practice
- Painting specifications of WTT supplied equipment is as per standard manufacturer painting specifications.

13.2. APPENDIX C: WARRANTY

The mechanical warranty is only applicable to equipment supplied by WTT. The mechanical warranty period on all equipment supplied, unless otherwise noted, is twelve (12) months from the date of installation or fourteen (14) months from the notification of material readiness, whichever occurs first. WTT's obligation under this warranty is to the repair or replace, of any device or part thereof, which shall prove to have been manufacturing defects.

This warranty excludes the diffuser membranes, electrical items, defects, failures, damages or performance limitations caused in whole or in part by normal wear & tear, power failures, surges, fires, floods, snow, ice, lightning, excessive heat or cold, highly corrosive environments, accidents, actions of third parties, or other events outside of WTT's control. Warranty period for the entire equipment including replaced or repaired parts will be limited to the unexpired portion of the total warranty period. Bought out components are guaranteed only to the extent of guarantees given to us by our suppliers.

WTT assumes no liability for any damage to equipment caused by inadequate storage or handling as per manufacturer's recommendations in supplied technical literature, or by defective or sub-standard workmanship or materials provided by Client or any other third party responsible for handling, storing or installing the equipment. Client undertakes to

give immediate notice to WTT if goods or performance appear defective and to provide WTT with reasonable time and opportunity to make inspections and tests. If WTT is not at fault, Client shall pay WTT the costs and expenses of the inspections and tests.

Goods shall not be returned to WTT without WTT's permission. WTT will provide Client with a "Return Goods Authorization" (RGA) number to use for returned goods. All return costs associated with shipping and labor are not included in the mechanical warranty. WTT warrants, subject to the provisions herein after set forth, that after stable operation of the WTT system has been attained and operators have acquired reasonable skills, the Equipment supplied for this project will be capable of producing the results set forth in stage wise parameter table, provided that:

The Equipment is operated and maintained at all times in accordance with the WTT Operations and Maintenance manual, The Equipment is operated within the mixed liquor characteristics defined in Influent quality table of this section, WTT has, until performance of its obligation herein is met, reasonable access to the Equipment and the operational data relating thereto, Client furnishes adequate and competent operating, supervisory and maintenance staff, and necessary laboratory facilities with test equipment and personnel, Client utilizes the services of WTT until its performance obligations are met, Client supplies all necessary raw materials and services of a quantity and of a quality specified by WTT, An adequate and continuous power supply is available that will enable operation of all required equipment.